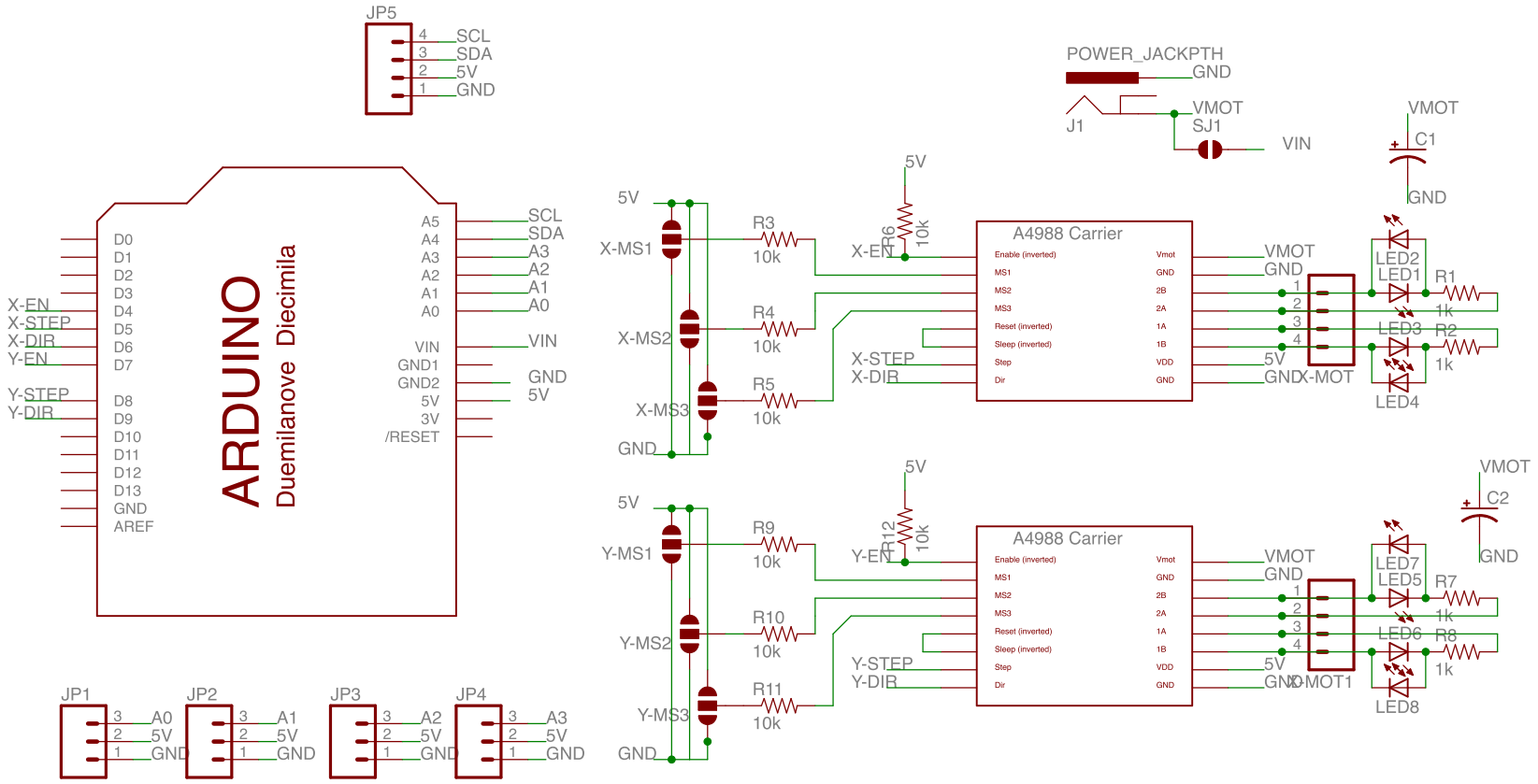

18/06/12 11:15 AM /Users/shannon/eagle/RoboDinoShield/RoboDinoShield v02e.sch (Sheet: 1/1)